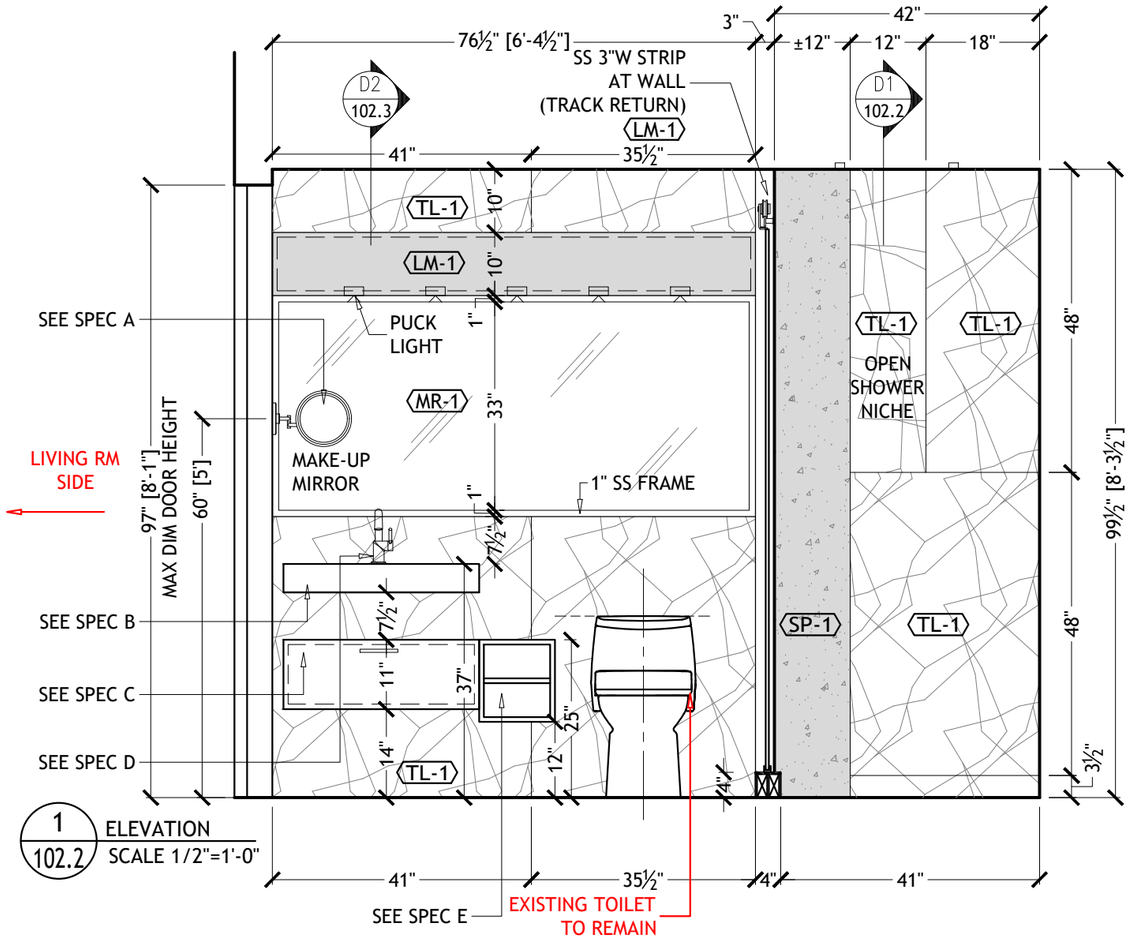

1 / 102.2 ELEVATION
SCALE 1/2"=1'-0"

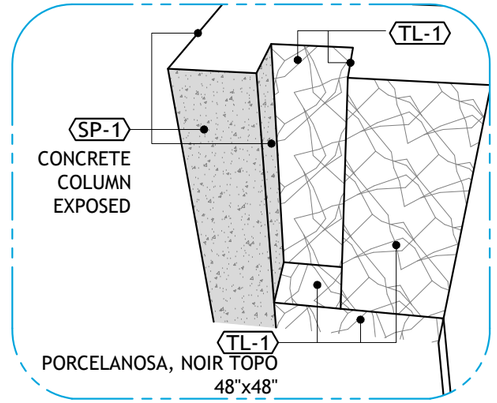

D1 / 102.2 SHOWER NICHE DETAIL
SCALE: REF.

SIMPLE HUMAN
MODEL: SENSOR MIRROR , WALL MOUNT
PRODUCT CODE:
ST3016

SP-A / 102.2 SPEC A - MAKE-UP MIRROR
SCALE: REF.

PORCELANOSA
MODEL: RAS
WORKTOP 31
1/2" x 21 1/4"
WHITE, WALL
HUNG

PRODUCT CODE:
100153751

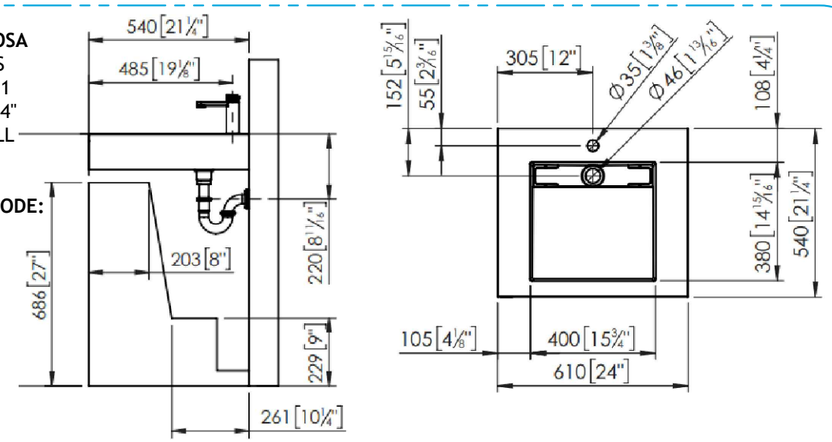

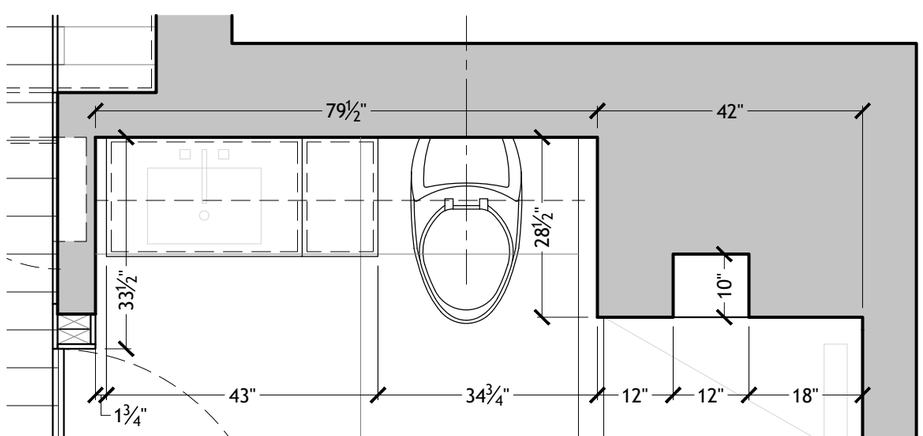

SP-B / 102.2 SPEC B - WORKTOP VANITY
SCALE: REF.

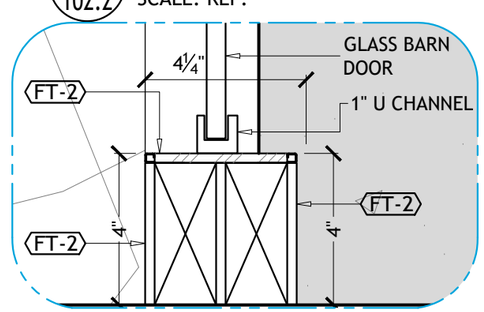

D2 / 102.2 CURB SECTION
SCALE 3"=1'-0"

FINISHES LEGEND:
- SP-1 EXPOSED CONCRETE
- TL-1 PORCELANOSA, NOIR TOPO 48"x48"
- FT-2 PORCELANOSA, NOIR TOPO 48"x48"
- LM-1 OCTOPUS, OCTOLUX STAINLESS STEEL, ALUMINIUM 15
- MIR-1 MIRROR

FOR CONSTRUCTION
JULY 29, 2022

REVISIONS:
JULY 22 CHANGE THE TL–1 MATERIALS, UPDATED EXPOSED COLUMN AND SHOWER NICHE INCLUDE VANITY AND PLUMBING FIXTURES

All site measurements must be verified by the contractor.
Any substitutes in materials, finishes or otherwise specified items are not acceptable without written approval of the designer.
This document and all associated documents are prepared for a specific site and event, and incorporate calculations and measurements available from the client at the time of drafting.
The contents of this document are not to be reproduced or copied in whole or part without the written permission of Fleur-de-Lis Interior Design Inc.
It is the responsibility of the contractor to build in compliance to and abide by all pertainable building codes.
Copyright © 2015

Fleur-de-lis interior design inc.
294 Eglinton Ave W
Toronto, ON M4R 1B2
Voice: (416) 929-8599
Fax: (416) 929.8535
www.fleurdelis.ca
consults@fleurdelis.ca

PROJECT NAME:
50 SOUTH POINT DRIVE, UNIT #613

SHEET TITLE:
BATHROOM
INTERIOR ELEVATIONS

102.2
ID

SCALE: 1/2"=1'-0"
LAST DRAWN: JULY 26, 2022
DRAWN BY: PM